KAMO 12V

astro

GENERAL

LOCATION:	Bathroom
CLASS:	CE (Class III)
IP RATING:	IP65
BATHROOM ZONE:	Zone 1, 2, 3
DRIVER REQUIRED:	-
INSTALLATION ORIENTATION:	Ceiling Mount
MAIN MATERIAL:	Metal - Zinc
DIMENSIONS (mm):	D: 5 Ø: 83
CUT OUT HOLE (mm):	Ø: 70
RECESS DEPTH (mm):	90
FIRE RATING:	-
CABLE LENGTH (mm):	-
GROSS WEIGHT (kg):	0.22

CODE: 1236001 (5547)
FINISH: MATT WHITE

LAMP

LIGHT SOURCE:	GU5.3
WATTAGE:	50W
LAMP INCLUDED:	No
MAXIMUM LAMP LENGTH (mm):	To Be Advised
LUMINOUS FLUX (lm):	Lamp Dependent
COLOUR TEMP (K):	Lamp Dependent
CRI (Ra):	Lamp Dependent
MACADAM ELLIPSE:	-
TILT ADJUSTABLE ANGLE (°):	-
ROTATION ADJUSTABLE ANGLE (°):	-
LIFETIME (hrs):	Lamp Dependent
BEAM ANGLE (°):	Lamp Dependent

ELECTRICAL

SWITCHED:	No
DIMMABLE:	Yes
DIMMING METHOD:	Control Gear Dependent
SUPPLY FREQUENCY (Hz):	-
DRIVER/BALLAST VOLTAGE (V):	-
DRIVER LIFETIME (hrs):	-
EFFICACY (lm/W):	Lamp Dependent

ADDITIONAL INFORMATION:

SHADE INCLUDED:	-
SHADE MATERIAL:	-
F MARK:	Suitable for mounting on flammable materials

TO MAINTAIN THIS PRODUCT TO ITS BEST CONDITION, PLEASE VIEW OUR CARE AND CLEANING GUIDE ON THE SUPPORT SECTION OF THE ASTRO WEBSITE.

Pour entretenir au mieux ce produit, veuillez consulter notre guide d'entretien et de nettoyage, dans la rubrique d'aide sur le site Web d'Astro.

Um dieses Produkt im besten Zustand zu erhalten, beachten Sie bitte unseren Leitfaden zu Pflege und Reinigung im Abschnitt „Support" auf der Astro-Website.

Per mantenere questo prodotto nelle sue migliori condizioni, consultare la nostra guida per la manutenzione e la pulizia nella sezione dedicata all'assistenza del sito Web Astro.

PRODUCT ELEVATIONS

astro

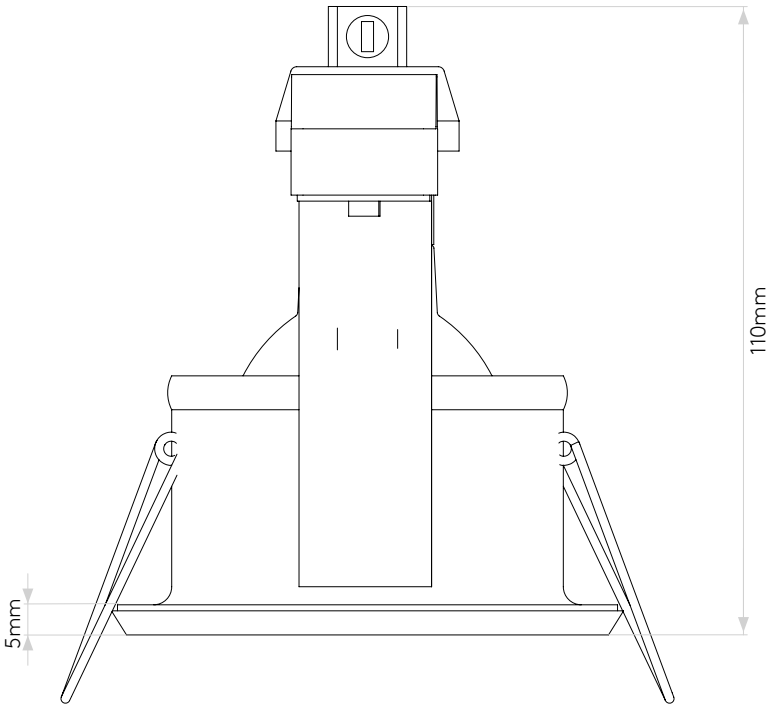

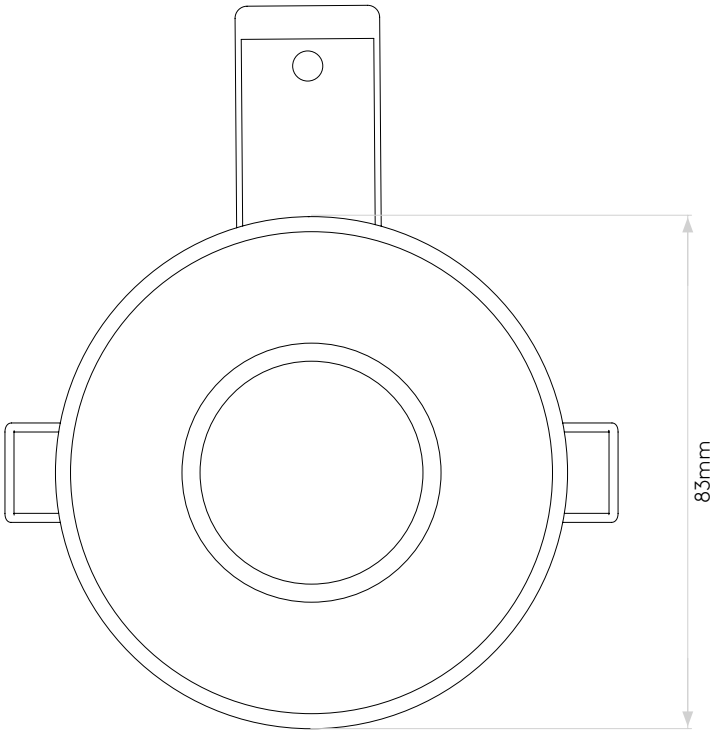

Please note that some dimensions may vary slightly due to manufacturing tolerances, this includes cable entry and fixing holes

Veuillez noter que certaines dimensions peuvent varier légèrement en raison des tolérances de fabrication, y compris l'entrée de câble et les trous de fixation.

Bitte beachten Sie, dass die Maße Fertigungstoleranzen unterliegen und daher in geringem Umfang von der angegebenen Größe abweichen können. Dies gilt auch für Kabeleingänge und Befestigungslöcher.

Si prega notare che possono esserci piccole variazioni in alcune dimensioni dovute alle tolleranze di produzione, queste includono l'ingresso del cavo e i fori di fissaggio.

CE